SCREEN OPTIONS

The screen or basket is the heart of the Keckley strainer. The media flows into the open end of the screen or basket and is strained as it passes through the screen towards the outlet. All particles larger than the screen opening are trapped inside. Screens are provided in perforated metal or wire mesh, depending on strainer size and/or material being strained. Only the best materials of the proper gauge to suit the service are used. All seams are spot welded for maximum strength. Double or reinforced screens are spot welded on the end peripheries as well as the seams. Reinforced screens consist of a perforated sheet lined with wire mesh. Keckley engineers have designed the screens to provide maximum total screen area.

Perforated Sheet Metal Sizes

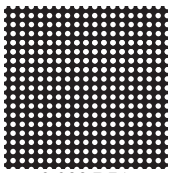

0.033 DIA
1/32" Approximately
331 Holes Per Sq. In.
29% Open Area

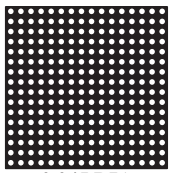

0.045 DIA
3/64" Approximately
225 Holes Per Sq. In.
33% Open Area

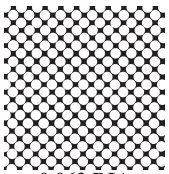

0.062 DIA
1/16" Approximately
98 Holes Per Sq. In.
30% Open Area

0.094 DIA
3/32" Approximately
51 Holes Per Sq. In.
36% Open Area

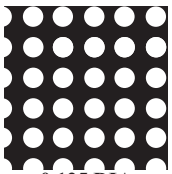

0.125 DIA
1/8" Approximately
29 Holes Per Sq. In.
43% Open Area

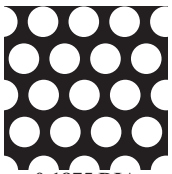

0.1875 DIA
3/16" Approximately
18 Holes Per Sq. In.
51% Open Area

Mesh Sizes

0.25 DIA
1/4" Approximately
12 Holes Per Sq. In.
58% Open Area

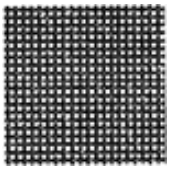

20 MESH
Wire Dia. 0.015
Opening 0.034
49% Open Area

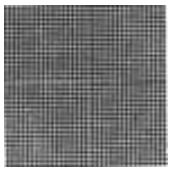

30 MESH
Wire Dia. 0.011
Opening 0.021
45% Open Area

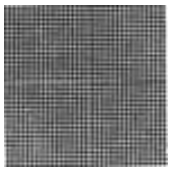

40 MESH
Wire Dia. 0.009
Opening 0.016
41% Open Area

50 MESH
Wire Dia. 0.0085
Opening 0.011
33% Open Area

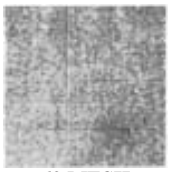

60 MESH
Wire Dia. 0.0065
Opening 0.010
38% Open Area

80 MESH
Wire Dia. 0.0055
Opening 0.0070
31% Open Area

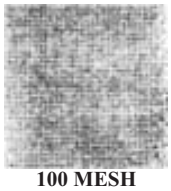

100 MESH
Wire Dia. 0.0045
Opening 0.0055
30% Open Area

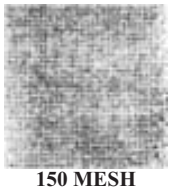

150 MESH
Wire Dia. 0.0026
Opening 0.0041
37% Open Area

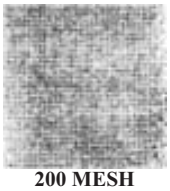

200 MESH
Wire Dia. 0.0021
Opening 0.0029
34% Open Area

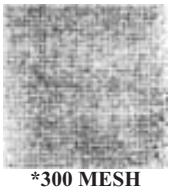

***300 MESH**
Wire Dia. 0.0012
Opening 0.002
41% Open Area

***300 Mesh available in Duplex Strainers only.**

Stainless steel screens are standard in all strainers except for Style F-300, E-300 and flanged bronze strainers; these strainers are supplied with brass screens. Other screen materials are available upon request (i.e. 316 SS, Monel, Hastelloy C276, Alloy 20, Duplex Stainless Steel, Titanium). In stainless steel, the smallest perforation obtainable is generallly twice the thickness of the metal itself. Therefore, perforations from 0.033" through 0.250", dependent on metal thickness, are readily available. When extra fine straining is required of the larger strainers, reinforced screens consisting of a perforated sheet lined with wire mesh are recommended. This allows removal of fine particles with added durability.

MAGNETS

Magnets can be provided as an option which, when placed inside the strainer screen, will remove very fine iron or steel particles present in fluid.

Magnets provide protection for equipment against abrasive damage.

Strainer Size	Magnets required
2½" – 4"	1 magnets
5" – 6"	2 magnets
8" – 10"	3 magnets
12" – 14"	4 magnets
16" – 18"	5 magnets

*Sizes 2" and smaller strainers can be furnished with magnetic plugs.

REINFORCING BANDS

Reinforcing bands can be used to add additional strength and durability to the screens or baskets when straining conditions have higher than normal pressure drops.

DETERMINING NET FREE AREA RATIOS

To calculate the ratio, use the following formula:

Formula:

1. Choose the size perforation or mesh needed to remove particles from the media passing through the strainer.
2. Multiply the *TOTAL SCREEN AREA* by the *PERCENT OF OPEN AREA of the screen*. The result equals the *OPEN AREA of the screen.*
3. Divide the result (*OPEN AREA of the screen*) by *the INSIDE AREA of the pipe* to give *the ratio of net free area of the screen to the pipe.*

Example: (2" Style B screwed "Y" strainer with a 20 mesh 304 stainless steel screen)

36.23 (*total screen area in²*)
x .49 (*20 mesh = 49% open area*)
17.753 (*total open area of screen*)

17.753" / 3.356" (*inside area of 2" pipe*) = 5.29:1
(RATIO OF NET FREE AREA OF THE SCREEN TO PIPE AREA)

INSIDE AREA OF THE PIPE (in²)							
Size	(in²)	Size	(in²)	Size	(in²)	Size	(in²)
1/4"	0.104	1-1/4"	1.496	4"	12.732	12"	111.946
3/8"	0.191	1-1/2"	2.036	5"	20.008	14"	135.294
1/2"	0.304	2"	3.356	6"	28.894	16"	176.738
3/4"	0.534	2-1/2"	4.788	8"	48.914	18"	223.71
1"	0.864	3"	7.394	10"	78.865	20"	278.04

Screen Opening Equivalents

Fractional Inches	Decimal Inches	Millimeters	Microns	Mesh
--	0.001	--	25	--
--	0.0015	--	37	400
--	0.002	--	50	300
--	0.003	--	75	**200**
--	0.004	1/10	100	**150**
--	0.005	1/8	125	115
--	0.006	--	149	**100**
--	0.007	--	177	**80**
--	0.010	1/4	250	**60**
--	0.011	--	280	**50**
--	0.016	--	406	**40**
--	0.020	1/2	500	--
--	0.021	--	533	**30**
--	0.030	3/4	750	--
1/32	0.033	--	838	--
--	0.034	--	840	**20**
--	0.039	1	1000	16
3/64	0.045	--	1143	--
--	0.046	--	1190	14
--	0.055	--	1410	12
--	0.059	1-1/2	1500	--
1/16	0.062	--	1575	--
--	0.065	--	1680	10
--	0.079	2	2000	9
--	0.093	--	2380	8
3/32	0.094	--	2388	--
--	0.110	--	2790	7
--	0.118	3	3000	--
1/8	0.125	--	3175	--
--	0.131	--	3330	6
--	0.156	4	4000	5
--	0.185	--	4700	4
3/16	0.1875	--	4763	--
--	0.197	5	5000	--
--	0.236	6	6000	--
1/4	0.250	--	6350	--
--	0.263	--	6700	3

Sizes in **bold red** are available from stock at Keckley Company.
Consult Factory for the availability of other sizes including those not listed.

KECKLEY PIPELINE STRAINERS
INSTALLATION AND MAINTENANCE

GENERAL

A Y-strainer can be installed in either a horizontal or vertical position (Downward flow) with the screen element pointing downward. This allows the strainer screen to collect material in the strainer at the lowest point of the screen.

Basket strainers are designed for installation in horizontal lines. They are commonly used for liquid service applications.

INSTALLATION

Carefully check all machined surfaces to make sure they are free of defects, and the inside of the strainer is free of foreign objects. All strainers should be installed with the arrow on the strainer body pointing in the direction of flow. For installation of threaded strainers an appropriate sealant should be used on the threads. For the installation of flanged strainers the flanged bolting should be tightened gradually going back and forth in a clockwise rotation until all bolts are tight. The system can now be pressurized gradually while checking for any leakage around all connections. If leakage occurs, depressurize the system and start the installation procedure over.

MAINTENANCE

WARNING

Before the removal or loosening of any bushing, cap, plug or cover on a strainer, extreme caution should be exercised to ensure there is zero pounds pressure in the system. Only after the system has been depressurized, should the strainer be drained for service.

SERVICE ON A PRESSURIZED STRAINER CAN CAUSE SERIOUS INJURY AND/OR PROPERTY DAMAGE.

A Y-strainer screen can be cleaned by removing the plug in the bushing, cap or bolted cover allowing the strainer to drain the loose material inside the screen. If a blow-off valve is connected to the strainer it can be opened to achieve the same result as the above. The Y-strainer screen can also be cleaned by removing the bushing, cap or cover to access the screen element.

Basket strainers with a closed bottom basket can be cleaned by removing the cap or cover and pulling out the basket screen for service. If the strainer screen is bottomless (Style DV, BDV, SDV) the blow-off plug can be removed allowing it to be drained and cleaned like a Y-strainer.

Care should be taken in cleaning screens. After removing a screen, it should be soaked in a cleaning solution or cleaned by using a brush. Do not allow trapped material in the screen to harden, as it will be difficult to remove. A regular cleaning schedule is recommended to avoid screens from becoming clogged.

A pressure gauge installed before and after a strainer will indicate a pressure loss due to clogging. This can help in establishing a maintenance schedule for cleaning the strainer screen. Extra screens can useful in keeping the system operating during the cleaning process.

KECKLEY

Style FB

Fabricated Basket Strainer
Bolted Cover
Carbon Steel & Stainless Steel

150 lb. Flanged & Butt Weld
300 lb. Flanged & Butt Weld
600 lb. Flanged & Butt Weld

Style FB-Q

Fabricated Basket Strainer
Quick Open Cover
Carbon Steel & Stainless Steel

150 lb. Flanged & Butt Weld
300 lb. Flanged & Butt Weld
600 lb. Flanged & Butt Weld

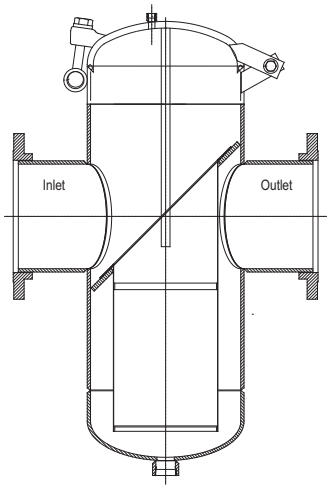

Fabricated Basket Strainer

APPLICATIONS

Steam, water, oil or gas where protection from foreign matter in a pipeline is required.

CONSTRUCTION

The Keckley Style FB family of fabricated basket strainers are available in carbon steel or stainless steel. Either flanged or butt weld connections are furnished. These basket strainers are available with a Quick Open Cover (FB-Q), Bolted Slip Hinge Cover (FB-H), or Integral Swing Arm Davit Assembly (Style FB-D). Flanges are raised face and drilled in accordance with ASME B16.5 and come standard with back-faced boltholes.

Special dimensions are available. For additional pressure classes, flanges, and materials of construction (Low Carbon Steel, Alloy 20, Hastelloy C276, Monel, and Duplex Stainless Steel) visit www.keckley.com.

BASKETS

Baskets are perforated 304 stainless steel and are spot welded for maximum strength. Different size perforations and meshes are available in stainless steel, monel, and brass to meet specific media requirements. If media is not indicated, ⅛" perforated 304 stainless steel baskets will be supplied.

CLEANING

Cleaning of the Style FB strainer is accomplished by removing the cover and pulling out the basket. **Warning:** See Maintenance Instructions on page S6 of the Strainer Information Section for additional precautions and detailed information on servicing the strainer.

KECKLEY

TECHNICAL DATA
DIMENSIONS AND WEIGHTS

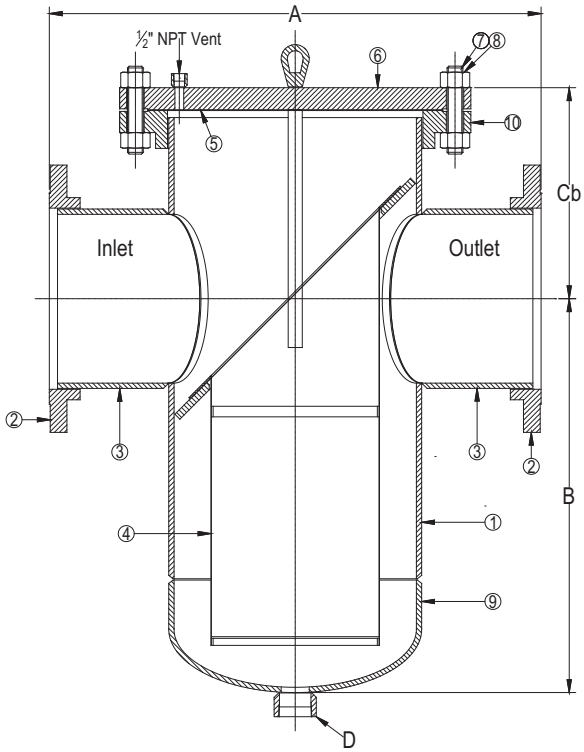

Style FB

Fabricated Basket Strainer

PARTS LIST				
ITEM	DESCRIPTION	MATERIAL		
1	Pipe	Carbon Steel	304 SS	316 SS
2*	RFSO Flange	Carbon Steel	304 SS	316 SS
3	Nozzle	Carbon Steel	304 SS	316 SS
4	Basket	Stainless Steel (304) - 1/8" Perforations		
5	Gasket	Fiber		
6	Blind Flange (Cover)	Carbon Steel	304 SS	316 SS
7	Studs	Carbon Steel (ASTM A 193, Grade B7)		
8	Nuts	Carbon Steel (ASTM A 194, Grade 2H)		
9	Weld Cap	Carbon Steel	304 SS	316 SS
10*	RFSO Flange	Carbon Steel	304 SS	316 SS

*30" & Larger Flanges are RFWN Series B.

Options: Other meshes, perforations, and screen materials are available.

Cover Options

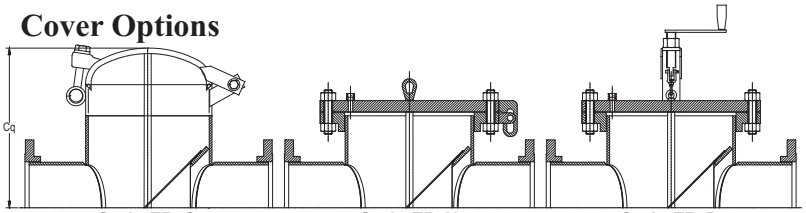

Style FB-Q
Quick Open Cover

Style FB-H
Bolted Slide Hinge Cover

Style FB-D
Integral Davit Swing Arm

Notes:

Consult factory for additional pressure classes, flange types, pipe grades, and materials of construction. Furnished standard with 1/2" NPT Vent.

SIZE		DIMENSIONS															
		A				B		Cb				Cq		D		Body Housing (Pipe Size)	
		150#		300#				150#		300#							
in	mm	in	mm	in	mm	in	mm	in	mm	in	mm	in	mm	in	mm	in	mm
4	100	16	406	17	432	14	356	10-1/2	267	12-1/2	318	11	279	1	25	8	200
5	125	16	406	17	432	15	381	11	279	13	330	13	330	1	25	8	200
6	150	20	508	21	533	17	432	11	279	13	330	13	330	1	25	10	250
8	200	22	559	23	584	21	533	12	305	14	356	15	381	1-1/2	40	12	300
10	250	32	813	33	838	25	635	13	330	15	381	17	432	1-1/2	40	16	400
12	300	35	889	36	914	28	711	15	381	17	432	19	483	1-1/2	40	18	450
14	350	37	940	38	965	33	838	16-1/2	419	18-1/2	470	20	508	2	50	20	500
16	400	42	1067	43	1092	36	914	17-1/2	445	19-1/2	495	23	584	2	50	24	600
18	450	42	1067	43	1092	39	991	18-1/2	470	20	508	24	610	2	50	24	600
20	500	43	1092	44-1/2	1130	44	1118	20	508	25	635	24	610	2	50	30	750
24	600	48	1219	49	1245	44	1118	21	533	27	686	27	686	2	50	30	750
30	750	60	1524	63	1600	54	1372	31	787	35	889	33	838	2	50	36	900

SIZE		WEIGHT												FB-Q Force required to lift cover	
		FB								FB-Q					
		Total Weight				Cover Weight				Total Weight					
		150#		300#		150#		300#		150#		300#			
in	mm	lbs	kgs	lbs	kgs	lbs	kgs	lbs	kgs	lbs	kgs	lbs	kgs	lbs	kgs
4	100	211	96	289	131	47	21	81	37	157	71	180	82	9	4
5	125	250	113	310	141	47	21	81	37	170	77	210	95	9	4
6	150	293	133	421	191	70	32	124	56	222	101	260	118	12	5
8	200	403	183	591	268	123	56	185	84	297	135	353	160	15	7
10	250	630	286	962	436	180	82	315	143	432	196	515	234	26	12
12	300	765	347	1283	582	220	100	415	188	539	244	758	344	32	15
14	350	951	431	1590	721	285	129	515	234	655	297	958	435	40	18
16	400	1323	600	2321	1053	430	195	800	363	870	395	1335	606	58	26
18	450	1357	616	2487	1128	430	195	800	363	904	410	1501	681	58	26
20	500	1943	881	3695	1676	543	246	1249	567	1193	541	1813	822	76	34
24	600	2120	962	4075	1848	543	246	1249	567	1370	621	2193	995	76	34
30	750	3063	1389	6100	2767	890	404	1921	871	2520	1143	5151	2336	149	68

†This table reflects only the nearest metric equivalents.

KECKLEY

Style FBO

Fabricated Basket - Offset
Bolted Cover
Carbon Steel & Stainless Steel

150 lb. Flanged & Butt Weld
300 lb. Flanged & Butt Weld
600 lb. Flanged & Butt Weld

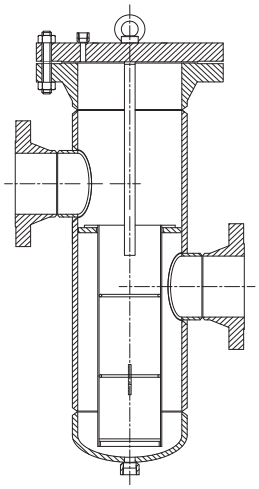

Flanged Offset Basket Strainer

APPLICATIONS

Water, oil or gas where protection from foreign matter in a pipeline is required.

CONSTRUCTION

Theses strainers can be fabricated to any specifications. The offset flanges allow easy connection for a wide variety of pump installations. These strainers are available in carbon steel, 304 stainless steel, and 316 stainless steel.

FEATURES

Theses strainers have been designed to answer the specific need for an extremely large capacity strainer requiring minimum down time for cleaning and are ideal for very fine straining. The basket and seat are designed to eliminate sediment by-pass for particle sizes as small as five micron. The low outlet design lends itself to pump installations where the suction is located close to the floor.

BASKETS

Standard baskets are perforated 304 stainless steel. All baskets are spot welded for maximum strength. Different size perforations and meshes are available in stainless steel, monel, and brass to meet specific media requirements. If media is not indicated, ⅛” perforated 304 stainless steel baskets will be supplied.

Optional Features

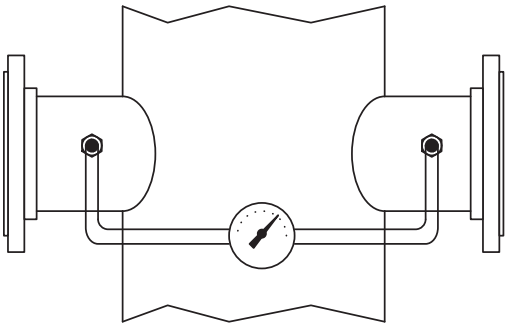

Differential Pressure Gauge

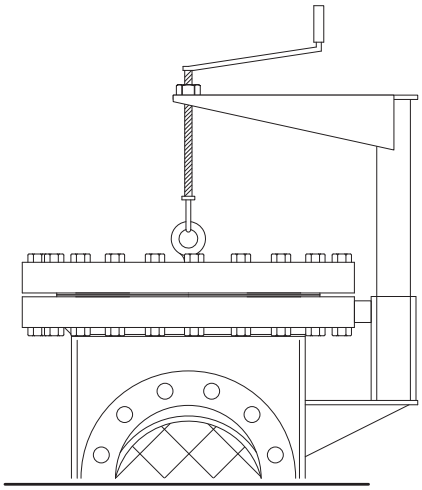

Integral Davit Swing Arm

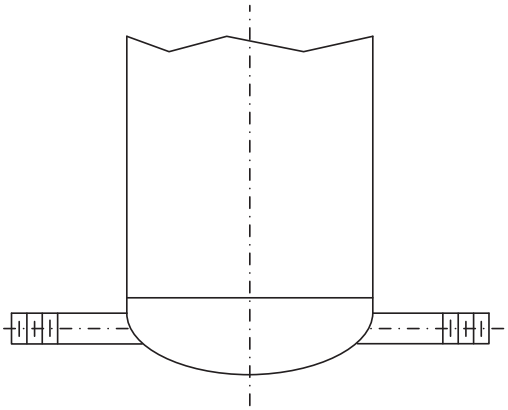

Special Drains

SPECIAL OPTIONS ON FABRICATED STRAINERS

- Differential Pressure Gauges
- Custom Nozzle Positions
- Custom Blowdown Connections
- Custom Venting
- Custom Basket Configurations
- Special Coatings and Galvanizing
- Custom Floor Stands and Mounting Hardware
- Oversized Bodies

DATA REQUIRED WHEN ORDERING

- Inlet and Outlet Size
- End Connections (Flange or Butt Weld)
- If Offset, Specify Dimensions
- Body Rating
- Design Pressure and Temperature
- Capacity Requirements
- Screen Material and Perforation/Mesh Size

KECKLEY

PRESSURE DROP CHART

Fabricated Basket Strainers

This pressure drop chart is based on the flow of clean water through the Keckley fabricated basket strainers with a ⅛" perforated basket.

TO USE CHARTS:

Find your desired rate of flow (GPM) on the left hand side of the chart. Follow its corresponding horizontal line to the point where it intersects the diagonal line indicating the strainer pipe size. From this point of intersection, follow the vertical line down to the bottom of the chart to determine the approximate pressure drop.

CORRECTION FACTORS:

For finer mesh baskets that are backed with a perforated sheet, multiply the pressure drops shown at right by the following:

40 mesh	x 1.2
60 mesh	x 1.4
80 mesh	x 1.6
100 mesh	x 1.7