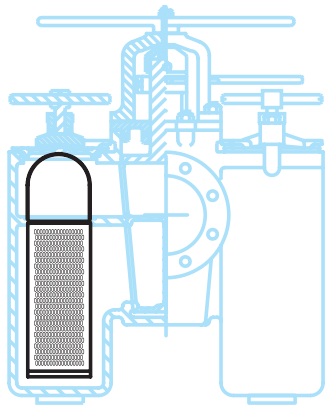

Partial cutaway of plug type duplex strainer showing basket in position

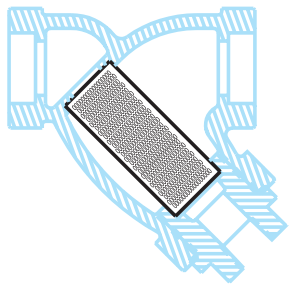

Cutaway of Y strainer shows strainer screen in position

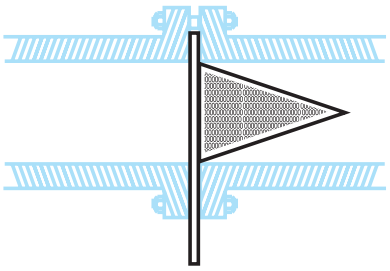

Cone type temporary strainer is shown bolted between two pipe flanges

Basic Sizing Guidelines

1. Ensure that the pipeline flow velocity falls within the standard design range of the strainer.
2. Select the correct screen and opening size, do not make smaller than necessary.
3. The quantity, type, and nature of debris to be removed are considered.
4. The strainer meets the design pressure and temperature requirements of the pipeline.

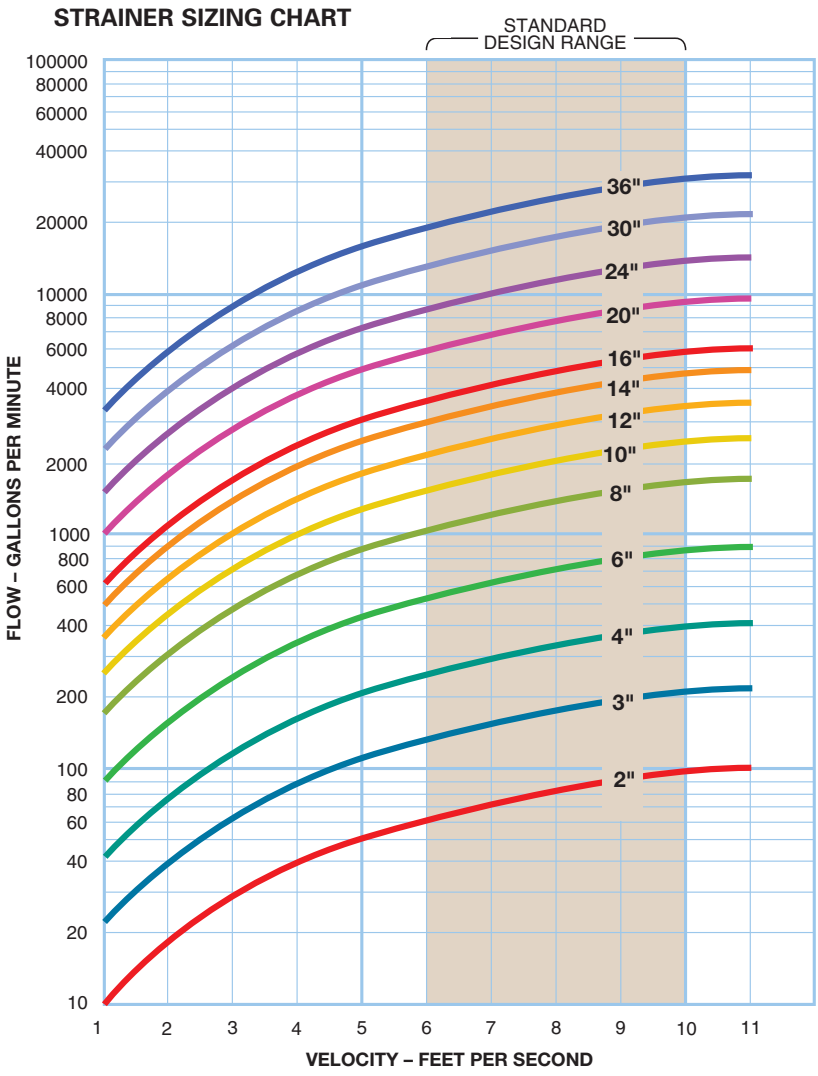

Multi-Basket Strainer

Model 510

Pipeline Strainer

Cast Construction

Permanent Media

- Sizes 8" to 36"
- Iron or Carbon Steel
- Flanged

FEATURES:

- Four baskets per strainer
- Bolted cover
- Straight through flow design
- Compact
- Threaded drain
- Perforated or mesh 316 stainless steel basket
- Low profile for easy basket removal

OPTIONS:

- Basket perforations from 1/32" to 1/2"
- Basket mesh of 20, 40, or 60
- Monel baskets
- Drain valves
- Gauge taps - 1/4" NPT
- Basket flange gaskets
- Cover lift davit
- Stainless steel construction
- Magnetic basket inserts
- Pressure differential gauges and switches

For Large Size Piping Systems with Flow Rates up to 40,000 GPM

The Model 510 simplex strainer is unlike other large size simplex strainers because of its multi-basket design. Four strainer baskets strain the process media and give the strainer an extremely high dirt removal capability—an important consideration in larger size strainers that, because of their size and design, take longer for basket cleaning or changeout. The longer the strainer stays in service between cleaning, the less expensive its total operating costs.

Reduced Pressure Loss

To reduce the pressure loss to an absolute minimum, the Model 510 has a straight through flow configuration, made possible by a unique basket design that incorporates a slanted top.

Multi-basket Design

The use of four baskets, rather than one or two, helps to keep operating costs low because the size of each basket can be smaller. This means that cleaning is a one-person job, eliminating the need for additional operators or lifting tackle to pull the baskets out of the strainer housing.

To make this job even faster and easier, the Model 510 has an optional cover lifting davit. The operator can raise the strainer cover and swing it out of the way for access to the strainer baskets. The four-basket design of the Model 510 provides an additional benefit as well: the centerline to bottom and centerline to top dimensions of the strainer are very short—creating a low-profile design ideally suited for installation in cramped quarters.

For large size piping systems with high flow rates, the Model 510 offers significant advantages over ordinary large size strainers, advantages that will improve performance and reduce operating costs over the life of the strainer

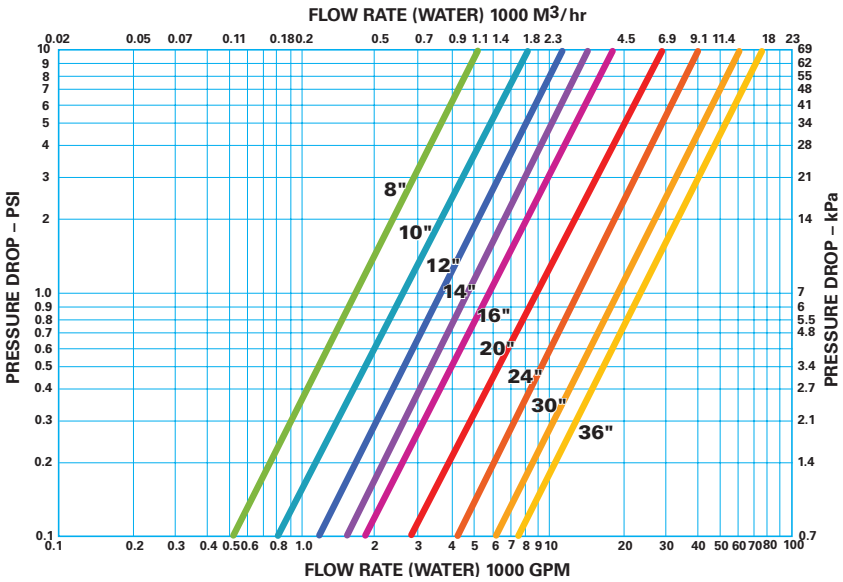

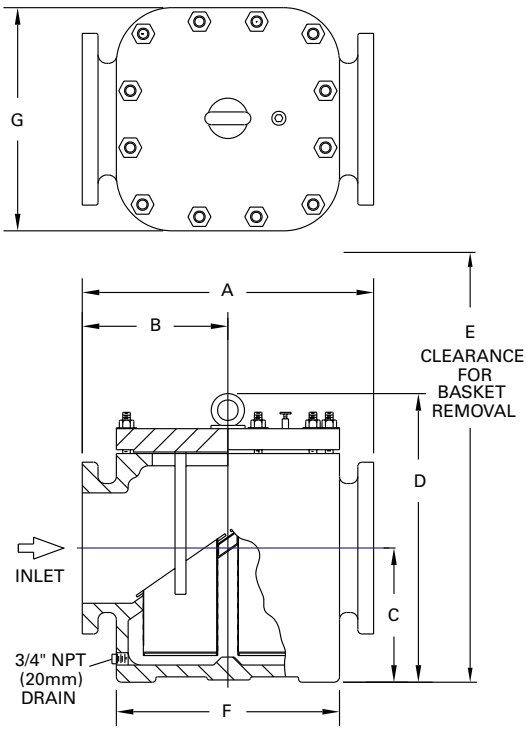

Dimensions and weights are for reference only. Contact Eaton for certified drawings.

Selection Chart

Size	Material	End Connections	Gasket	Pressure Rating
8" to 24"	Iron	Flanged 125#	Non-Asbestos	125 psi @ 100°F
30" to 36"	Iron	Flanged 125#	Non-Asbestos	70 psi @ 100°F
8" to 24"	Carbon Steel	Flanged 150#	Non-Asbestos	150 psi @ 100°F
8" to 16"	Carbon Steel	Flanged 300#	Non-Asbestos	300 psi @ 100°F

C_V Factors*

Size	Value	Size	Value	Size	Value
8"	1600	14"	4800	24"	13000
10"	2500	16"	5800	30"	19000
12"	3500	20"	9000	36"	23000*

*For water with clean, perforated basket

Dimensions (in/mm)

Pipe Size	A	B	C	D	E	F	G	-----Dry Wt (lb / kg) ------- Iron	Carbon Steel
8	23.25 / 591	11.63 / 295	9.13 / 232	20.13 / 511	38 / 965	18.00 / 457	18.50 / 470	547 / 249	547 / 249
10	26.13 / 664	13.06 / 332	11.38 / 289	23.75 / 603	44 / 1118	20.25 / 514	21.00 / 533	730 / 332	730 / 332
12	29.00 / 737	14.50 / 368	14.63 / 372	28.38 / 721	52 / 1321	22.25 / 565	22.75 / 578	1080 / 491	1080 / 491
14	30.50 / 775	15.25 / 387	16.75 / 425	31.25 / 794	60 / 1524	24.63 / 626	25.13 / 638	1360 / 618	1360 / 618
16	33.50 / 851	16.75 / 425	19.13 / 486	35.50 / 902	66 / 1676	27.13 / 689	27.75 / 705	1750 / 795	1750 / 795
20	44.75 / 1137	22.00 / 559	28.50 / 724	46.25 / 1175	88 / 2235	32.75 / 832	34.75 / 883	3330 / 1514	3330 / 1514
24	44.38 / 1127	22.19 / 564	31.50 / 800	52.25 / 1327	98 / 2489	36.63 / 930	38.50 / 978	4550 / 2068	4550 / 2068
30	61.50 / 1562	30.75 / 781	41.63 / 1057	66.50 / 1689	125 / 3175	47.50 / 1207	47.50 / 1207	8880 / 4036	8880 / 4036
36	62.00 / 1575	31.00 / 787	41.63 / 1057	66.50 / 1689	125 / 3175	47.50 / 1207	47.50 / 1207	9700 / 4409	9700 / 4409

Basket and Screen Data

Pattern Examples

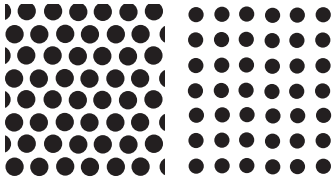

Staggered Holes Straight Holes

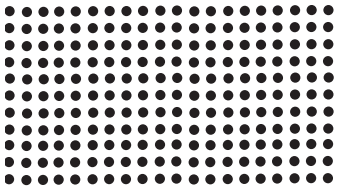

1/32" – Actual Size

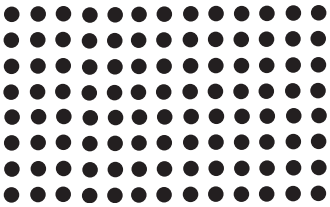

1/16" – Actual Size

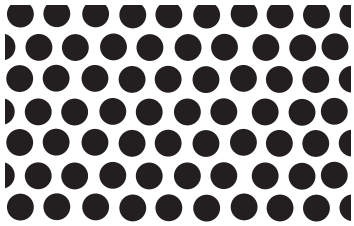

1/8" – Actual Size

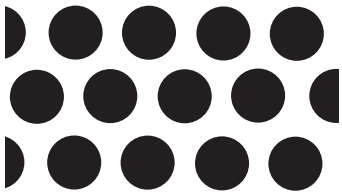

1/4" – Actual Size

Basket and Screen Design

Designed to be both effective and durable, the basket or screen is the heart of an Eaton strainer. Eaton supplies baskets for simplex and duplex strainers, and screens for Y strainers, in standard and heavy-duty designs. Standard design baskets meet the needs of most applications. Eaton recommends the heavy-duty design in cases when straining an extremely high viscosity material or experiencing a high solids load.

Eaton baskets and screens are available in two standard materials: 316 stainless steel or Monel. These materials cover nearly all corrosion resistance levels needed in strainer services. A wide range of perforations and mesh provides removal of solids from 1/2" down to as low as 40 microns. For special, unique applications, Eaton custom fabricates baskets from just about any material to exact specifications.

Basket Construction

Each style basket includes a perforated sheet induction welded to a rigid top ring and solid bottom cap. Special attention to the welds along the perforated sheet seam, prevent the possible bypass of solids and maintain the basket's strength. A handle, welded to the I.D. of the top ring, facilitates easy removal. Heavy-duty baskets have reinforcing strips induction welded along the perforation's seam, and circumferentially on the outside of the mid-section of the basket. The perforated sheet is inside the top ring and bottom cap.

Screen Construction

Y strainer screens, rolled to form a perfect cylinder, are induction welded along the seam. A neat weld, applied along the perforated sheet seam, prevents the possible bypass of solids and provides a seam of acceptable strength. Eaton machines Y strainer screen seats to specific dimensions and, accordingly, both the O.D. and length of these screens are closely toleranced.

Perforated Sheet – Specification

Eaton baskets utilize perforated sheets because of their greater inherent strength and resistance to stress cracking. The percentage of open area of a screen generally dictates the internal pressure drop experienced across it. The objective is to select a perforation with the best balance of open area, hole arrangement, and sheet thickness.

Open Area

Perforated sheets can have an open area from 15% to 75%. In general, the larger the open area of perforated sheet, the thinner the sheet thickness must be. Holes punched closer together increase the perforated open area; the solid portion between holes distorts and becomes weak. Another factor in controlling the sheet thickness is the hole diameter. The smaller the hole diameter, the thinner the sheet. The rule of thumb used by commercial perforated sheet manufacturers is that hole dimensions smaller than the plate thickness are impractical and costly to manufacture. Eaton baskets and screens have between 28% to 63% open area with gauge thickness from 18" (0.048") to 25" (0.021"), depending upon the size of the perforations and the size and model of the strainer.

Hole Arrangement

Holes can be punched either in a straight line or in a staggered pattern. Eaton baskets and screens have a staggered pattern that increases the open area, provides extra strength, and creates less pressure drop.

Perforations

Eaton baskets and screens are available in 1/32", 3/64", 1/16", 1/8", 5/32", 1/4", 3/8", and 1/2" perforations and in mesh sizes 20, 40, 60, 80, 100, 200, 325, and 400. However, for general service there is one perforation for each size and type of strainer. Unless specified, this standard perforation is the size furnished with the strainer.

EATON
Powering Business Worldwide

Basket and Screen Data

Wire Mesh Specifications

All Eaton strainers are available with woven wire mesh screens. Wire mesh provides smaller openings for very fine straining applications down to 40 microns. Eaton baskets and screens use monofilament mesh possessing equal wire size and wire count in both directions to produce square openings. Other types of mesh such as Dutch (or Hollander) are also available. Dutch weave has a greater quantity of wires in one direction and fewer wires of a larger diameter in the other direction. This creates a rectangular opening. As with perforated sheet, the best wire mesh selection is a balance of open area, wire diameter, and type of weave.

Openings

Standard wire mesh liners for Eaton baskets and screens are available from 20 to 400 mesh. For any size mesh, there are different open area selections based on the diameter of the wires used. Twenty mesh means 20 wires per inch in both a vertical and horizontal direction. Therefore, as the wire size increases, the hole size decreases. Eaton baskets offer wire mesh with openings from 0.034" to 0.0015" (20 mesh to 400 mesh).

Open Area

The open area of wire mesh is a function of both the weave and the wire diameter. Eaton uses a plain square weave in most cases because its straight-through flow path creates the least pressure drop. The mesh is reinforced with a perforated metal backing possessing greater than a 60% open area. This combination affords the greatest degree of strength, yet offers a lower pressure drop than other types of wire mesh. In certain instances, such as Y strainer in steam applications, the increased pressure drop resulting from the use of a Dutch weave is not as critical as the retention of small particles. Therefore, in applications that involve steam, Eaton suggests the use of weave such as the 30 x 160 size that can withstand a much higher differential pressure without bursting. Eaton can supply baskets and screens with open areas from 14% to 46%

Plain Square Weave

Woven in an over and under pattern of wire having the same diameter, this weave produces a square opening with excellent flow characteristics.

Plain Dutch Weave

Woven in an over and under pattern in one direction in which the horizontal wires are larger in diameter than the vertical wires, which are driven close and crimped at each pass. This weave produces greater strength, but lower flow rates, than a square weave. Most often used in steam applications.

Mesh Liners Available

The number of openings per linear inch determines the size of mesh liners. The standard sizes Eaton can furnish are 20, 40, 60, 80, 100, 200, 325, and 400.

Perforated Basket Sheet Specifications

Perforation Size Inches	Sheet Thickness USS Gauge #	Hole Pattern	% Open Area
0.020	26	Straight	16.0
1/32	26	Straight	28.0
3/64	26	Straight	30.2
0.045	26	Staggered	36.0
1/16	26	Straight	31.0
1/8	26	Staggered	47.9
5/32	26	Staggered	63.0
1/4	26	Staggered	42.0
3/8	26	Staggered	52.0
1/2	26	Staggered	47.9

Mesh Basket Sheet Specifications

Mesh Size	Wire Diameter Inches	Mesh Opening Inches	Mesh Opening Microns	% Open Area
20	0.016	0.0340	864	46.2
40	0.010	0.0150	381	36.0
60	0.0075	0.0092	234	30.5
80	0.0060	0.0065	165	27.0
100	0.0045	0.0055	140	30.3
200	0.0021	0.0029	74	33.6
325	0.0014	0.0017	43	30.0
400	0.0015	0.0381	38	36.0

Wire Mesh Weaves

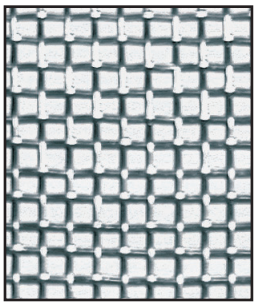

Plain Square Weave

Plain Dutch Weave

Basket Effective Area

Strainer Model	Pipe Size	Perforation Size	Nominal Area of Pipe (sq in)	Gross Screen Area (sq in)	Free Area (sq in)	Ratio Free Area to Pipe Area
85	1/4	.045	.10	5.0	1.8	18.0
85	3/8	.045	.19	5.0	1.8	9.5
85	1/2	.045	.30	5.0	1.8	6.0
85	3/4	.045	.53	7.1	2.6	4.9
85	1	.045	.86	10.4	3.7	4.3
85	1-1/4	.045	1.49	15.1	5.5	3.7
85	1-1/2	.045	2.03	21.7	7.8	3.8
85	2	.045	3.35	30.4	10.9	3.3
85	2-1/2	.045	4.78	43.2	15.5	3.2
85	3	.045	7.39	70.7	25.5	3.4
85	4	.045	12.73	106.8	38.4	3.0
85	6	.045	28.70	241.7	87.0	3.0
85	8	.045	50.02	414.6	149.2	3.0
85	10	.045	71.80	652.2	234.8	3.3
30R	1-1/2	5/32	2.03	35.4	22.3	11.0
30R	2	5/32	3.35	50.9	32.1	9.6
30R	2-1/2	5/32	4.78	84.7	53.4	11.2
30R	3	5/32	7.39	84.7	53.4	7.2
30R	4	5/32	12.73	114.5	72.1	5.6
30R	5	5/32	20.0	158.1	99.6	5.0
30R	6	5/32	28.9	180.9	113.9	4.0
30R	8	5/32	50.03	275.6	171.8	3.4
50	3/4	1/32	0.53	19.5	5.2	9.8
50	1	1/32	0.86	19.5	5.2	6.1
50	1-1/4	1/8	1.49	39.7	19.0	12.8
50	1-1/2	1/8	2.03	39.7	19.0	9.4
50	2	1/8	3.35	64.0	30.7	9.2
50	2 -1/2	1/8	4.78	64.0	30.7	6.4
50	3	3/16	7.39	85.6	42.8	5.8
50	4	3/16	12.73	146.1	73.0	5.7
50	5	3/16	20.0	216.1	106.0	5.4
50	6	3/16	28.9	265.4	132.7	4.6
50	8	3/16	50.02	506.7	253.4	5.1
50	10	3/16	78.8	800	400	5.1
50	12	3.16	113,1	1200	600	5.3
50	14	3/16	137.9	2000	1000	7.3
50	16	3/16	182.6	2000	1000	5.5
50	18	3/16	182.6	2000	1000	5.5
53BTX	3/4	1/32	0.53	19.8	5.5	10.4
53BTX	1	1/32	0.86	19.8	5.5	6.4
53BTX	1-1/4	1/8	1.49	45.0	22.0	14.4
53BTX	1-1/2	1/8	2.03	45.0	22.0	10.6
53BTX	2	1/8	3.35	65.0	31.0	9.3
53BTX	2 -1/2	1/8	4.78	65.0	31.0	6.5
53BTX	3	3/16	7.39	110.3	55.1	7.4
53BTX	4	3/16	12.73	152.0	76.0	5.9
72	3/8	1/32	0.19	12.7	3.4	18.0
72	1/2	1/32	0.30	12.7	3.4	11.3
72	3/4	1/32	0.53	19.5	5.2	9.9
72	1	1/32	0.86	19.5	5.2	6.1
72	1-1/4	1/8	1.49	30.1	14.4	9.7
72	1-1/2	1/8	2.03	49.7	19.0	9.4
72	2	1/8	3.35	50.9	24.4	7.3
72	2-1/2	1/8	4.78	80.2	38.4	8.0
72	3	3/16	7.39	114.5	57.2	7.8
72	4	3/16	12.73	168.3	84.1	6.6
72	5	3.16	20.0	265.4	132.7	6.6
72	6	3/16	28.9	324.2	162.1	5.6
72	8	3/16	50.02	555.3	277.7	5.6
72	10	3/16	78.8	800	400	5.1
72	12	3/16	113.1	1200	600	5.3
72	14	3/16	137.9	2000	1000	7.3
72	16	3/16	182.6	2000	1000	5.5
72	18	3/16	182.6	2000	1000	5.5

Alloy Data

Metal Alloys used in Eaton Strainers

Carbon Steel – ASTM A-216 Grade WCB

Tensile Strength: . . . . . 70,000 lb/sq in
Yield:. . . . . 36,000 lb/sq in
Elongation: 22%
Chemical Composition:
C (Carbon) 0.30%
Si (Silicon) 0.60%
P (Phosphorus) 0.04%
S (Sulfur) 0.045%
Mn (Manganese) 1.00%
Residual Elements . . . . 1.00% max

Aluminum Bronze – ASTM B-148 Grade C95400

Tensile Strength: . . . . . 75,000 lb/sq in
Yield:. . . . . 30,000 lb/sq in
Elongation: 12%
Chemical Composition:
Cu (Copper) 85%
Fe (Iron) 4%
Al (Aluminum) 11%

Stainless Steel – ASTM A-351 Grade CF8M

Tensile Strength: . . . . . 70,000 lb/sq in
Yield:. . . . . 30,000 lb/sq in
Elongation: 30%
Chemical Composition:
C (Carbon) . . . . . 0.08% max
Si (Silicon) 1.5%
P (Phosphorus) 0.040%
Cr (Chromium) . . . . . 18.0 - 21.0%
Ni (Nickel) . . . . . 9.0 - 12.0%
Mn (Manganese) 1.50%
S (Sulfur) 0.04%
Mo (Molybdenum) . . . . 2.0 - 3.0%

Cast Iron – ASTM A-126 Class B

Tensile Strength: . . . . . 31,000 lb/sq in
Compressive Strength: 109,000 lbs/sq in
Tensile Modulus: . . . . . 15 x 10^6 lb/sq in
Chemical Composition:
C (Carbon) . . . . . 3.20 - 3.40 %
Si (Silicon) . . . . . 2.10 - 2.30%
P (Phosphorus) . . . . . 0.15 - 0.30%
S (Sulfur) . . . . . 0.08 - 0.12%
Mn (Manganese) . . . 0.50 - 0.80%

Ductile Iron - ASTM A-395 Grade 60-40-18

Tensile Strength: . . . . . 60,000 lb/sq in
Yield:. . . . . 40,000 lb/sq in
Elongation: 18%
Chemical Composition:
C (Carbon) . . . . . 3.20 - 4.0%
Si (Silicon) . . . . . 1.80 - 2.80%
P (Phosphorus) . . . . . 0.08% max.
S (Sulfur) . . . . . 0.03% max.
Mn (Manganese) . . . 0.03% max.

Pressure Drop Calculations

Pressure drops for Eaton strainers are shown on each product page. The curves are based on the flow of water through clean, perforated baskets or screens. For mesh-lined baskets or screens and/or for fluids other than water, use the correction factors listed on this page. To accurately calculate the pressure loss for filters and strainers in a pipeline, proceed as follows:

1. First calculate pressure loss using C_V factor formula at right.
2. Take the pressure loss figure obtained in (1) and recalculate it using the appropriate correction factor from the following table.

Correction Factors for Mesh-Lined Baskets

First – Multiply the pressure drop for water shown in charts by the specific gravity of the liquid.

Second – Multiply the corrected pressure drop figure by the following correction factors for more viscous liquids. (Water has a viscosity of 30 SSU.)

Viscosity (SSU)	Unlined Perforated Basket	40 Mesh Lined Basket	60 Mesh Lined Basket	80 Mesh Lined Basket	100 Mesh Lined Basket	200 Mesh Lined Basket	325 Mesh Lined Basket
30 (water)	0	1.2	1.4	1.6	1.7	2.0	2.5
500	1.6	1.9	2.1	2.4	2.6	3.1	3.6
1000	1.7	2.2	2.4	2.6	2.8	3.3	3.8
2000	1.9	2.4	2.7	2.9	3.2	3.8	4.0
3000	2.0	2.6	2.9	3.2	3.5	4.1	4.3
5000	2.2	3.0	3.5	4.0	4.5	5.3	6.3
10000	2.5	3.5	4.2	5.0	6.0	7.1	8.5

Strainer Basket Opening Equivalents

Mesh	Inches	Millimeters	Microns
400	0.0015	0.0381	38
300	0.0018	0.0457	45
250	0.0024	0.0609	60
200	0.0027	0.0686	68
150	0.0041	0.1041	104
100	0.0065	0.1651	165
80	0.007	0.1778	177
60	0.009	0.2286	228
40	0.015	0.8636	380
20	0.034	0.8636	862

Perf	Inches	Millimeters	Microns
1/32	0.033	0.838	838
3/64	0.045	1.143	1143
1/16	0.070	1.778	1776
3/32	0.094	2.387	2387
1/8	0.125	3.175	3175
5/32	0.150	3.810	3810
3/16	0.1875	4.762	4762
1/4	0.250	6.350	6350
3/8	0.375	9.525	9525
1/2	0.500	12.700	12700

Pressure Loss Calculation Using C_V Factor

Metric Units

$$\Delta P = \left[\frac{Q}{C_V}\right]^2 (133.6)$$

ΔP = Pressure Drop in kPa
Q = Flow in M^3/hr
C_V = Flow Coefficient

Standard Units

$$\Delta P = \left[\frac{Q}{C_V}\right]^2$$

ΔP = Pressure Drop in psi
Q = Flow in gpm
C_V = Flow Coefficient

The pressure loss across a strainer can be calculated using the system's flow rate and the C_V factor for that strainer.

For example, a 1" Model 72 simplex strainer with a perforated basket has a C_V factor of 22.5. In water service with a 30 gpm flow rate, it will have a 1.7 psi pressure drop $(30 \div 22.5)^2 = 1.7$. For mesh-lined baskets and/or fluids with a viscosity greater than water, multiply the pressure drop by the correction factors in the chart "Correction Factors for mesh-lined baskets."

Eaton Filtration, LLC

Installation, Operation & Service Manual

Model 510
Basket Strainer

Read all instructions before installation or operation of equipment. Failure to comply with these instructions could result in bodily injury or property damage.

Table of Contents

Introduction
A simplex strainer is a device installed in a pipeline to remove dirt and other unwanted debris from fluids. Straining is accomplished by directing the fluid through sized opening in baskets. Simplex strainers are installed where fluid flow can be interrupted while the baskets are removed for cleaning. Simplex strainer are designed to withstand the pressures of the piping system.

For additional information about simplex basket strainers visit our web site:

www.Eaton.com/Filtration

Receiving, Handling, and Inspection
Inspect strainer after unpacking for damage incurred during transit. Report any damage to carrier immediately. If the strainer is not to be installed immediately, store indoors in a clean, dry environment.

Remove preservative with solvent dampened cloths. Exercise care when using solvent.

Check to be sure the rated pressure and temperature on the strainer name plate is not less than the maximum pressure and temperature of the installation. The rated pressure shown on the name plate is the maximum pressure, including shock, at which the strainer may be operated.

Remove strainer cover. Check for and remove any foreign or loose materials that could be carried downstream when fluid is introduced into the strainer.

Replace strainer cover. Tighten fasteners uniformly. Baskets are held in place by the pressure of the cover on the basket handles. If the baskets are loose, spring the handles to a higher position to insure greater compression when the cover is seated.

Installation

Caution: Lift strainers with slings under the inlet and outlet connections. DO NOT lift the strainer by the lift eye located on the strainer cover. The lift eye is used to lift ONLY the cover.

Position the strainer in the line so that the fluid enters the connection marked inlet.

Be sure sufficient headroom is provided for easy removal of cover and baskets.

Support the strainer in the line on concrete or steel pads.

Connect the strainer to the line. Use the same type flange faces. For example: DO NOT bolt raised face flanges to iron flat face flanges. Iron flanges must be flat face with full face gaskets. Cast strainers are subject to face-to-face variations due to shrinkage and machining tolerances. Prefabricated piping systems must allow for adjustments to compensate.

Installation, Continued

Be sure flange gaskets are in place and fasteners are tight.

It is recommended that the drain plug be removed and a drain valve be installed at the bottom of the basket chamber as shown in Figure 1.

Caution: When fluids other than water and with temperatures in excess of 120° F are to be handled by the strainer, the vent cock must be removed and the vent piped to a safe discharge poing to protect the operator (see Figure 2). Wear protective clothing which includes gloves, vests and goggles when handling dangerous fluids.

Pressure gages near the strainer inlet and outlet are recommended. Cleaning frequency can be determined by the pressure drop across the strainer.

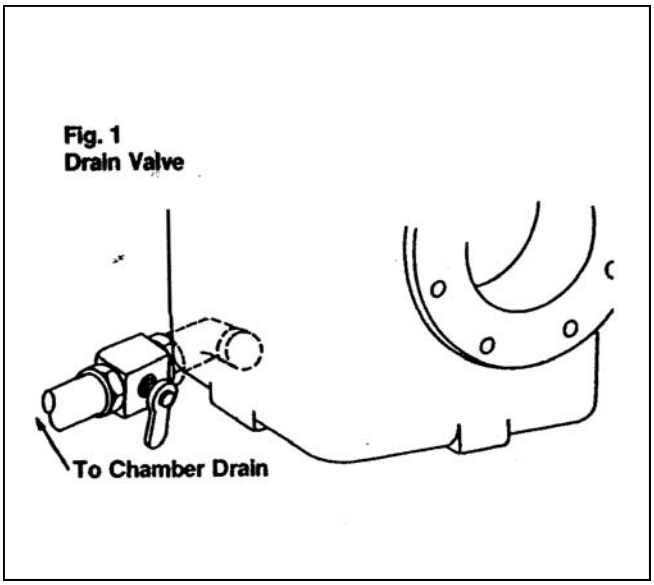

Fig. 1
Drain Valve

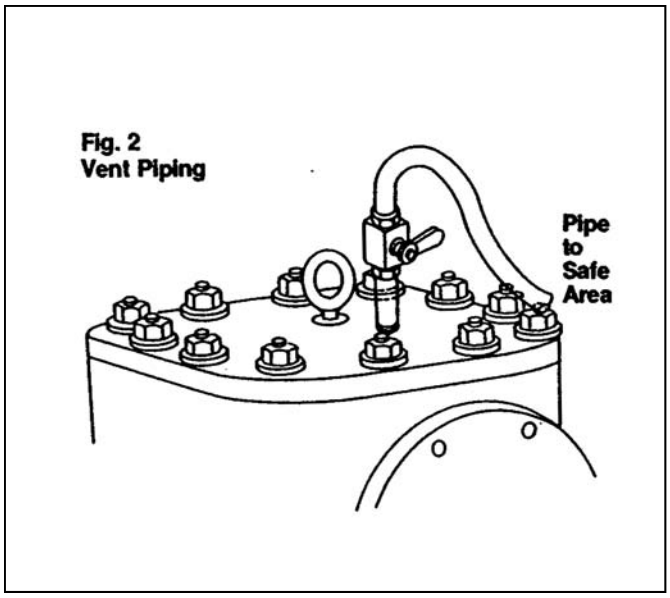

Fig. 2
Vent Piping

Start-Up

Open vent to expel air from the strainer.

Slowly introduce fluid to be strained.

Caution: Start system GRADUALLY. This eliminates sudden shock to strainer and other equipment in the line.

Close vent when air is expelled and fluid begins to flow.

Shut Down

Tightly close valves on inlet and outlet connections of the strainer.
Open vent to relieve liquid pressure in the strainer.

Caution: DO NOT loosen cover while there is liquid or air flow from the vent.

Basket Removal

Follow shut down procedure.

When pressure is relieved, loosen fasteners, remove cover and drain fluid through bottom drain to a level below the basket seats.

Remove dirty baskets.

Basket Replacement

Place new or clean baskets squarely on basket seats. Make sure short baskets are located on the inlet side of the strainer.

Be sure basket handles are sufficiently high to be compressed by strainer cover.

Inspect cover gasket and seal surface, clean seat or replace cover gasket as necessary. Always keep spare cover gaskets in storage.

Replace cover, tighten fasteners uniformly. Close drain valve. If strainer is on suction service, fill basket chamber from outside source before installing cover.

Follow start up procedure.

Basket Cleaning

When to Clean
Clean baskets when there is a 5 PSI increase in pressure loss across the strainer.

Caution: To prevent damage to the baskets, DO NOT permit strainer pressure differential between inlet and outlet connections to exceed 20 PSI

How to Clean
Invert basket and wash out debris by directing a stream of air or water against the basket exterior. Use solvent if strained fluid is fuel or a chemical. Follow manufacturer's instructions when using a solvent to clean the baskets.

Inspect basket at each cleaning for holes or tears, repair or replace as required. Always keep spare baskets in stock.

Shutdown Periods
During shutdown periods:

Drain the fluid.

Clean the baskets.

Recommended Spare Parts
One Eaton basket set (2 long baskets, 2 short)

One Eaton gasket set.

Always use genuine Eaton replacement parts for guaranteed fit and performance When ordering spare parts, be sure to specify all name plate data as well as description and quantity of parts.

Visit our web site www.filtration.eaton.com for information about the different types of Eaton pipeline strainers.

Parts Drawing

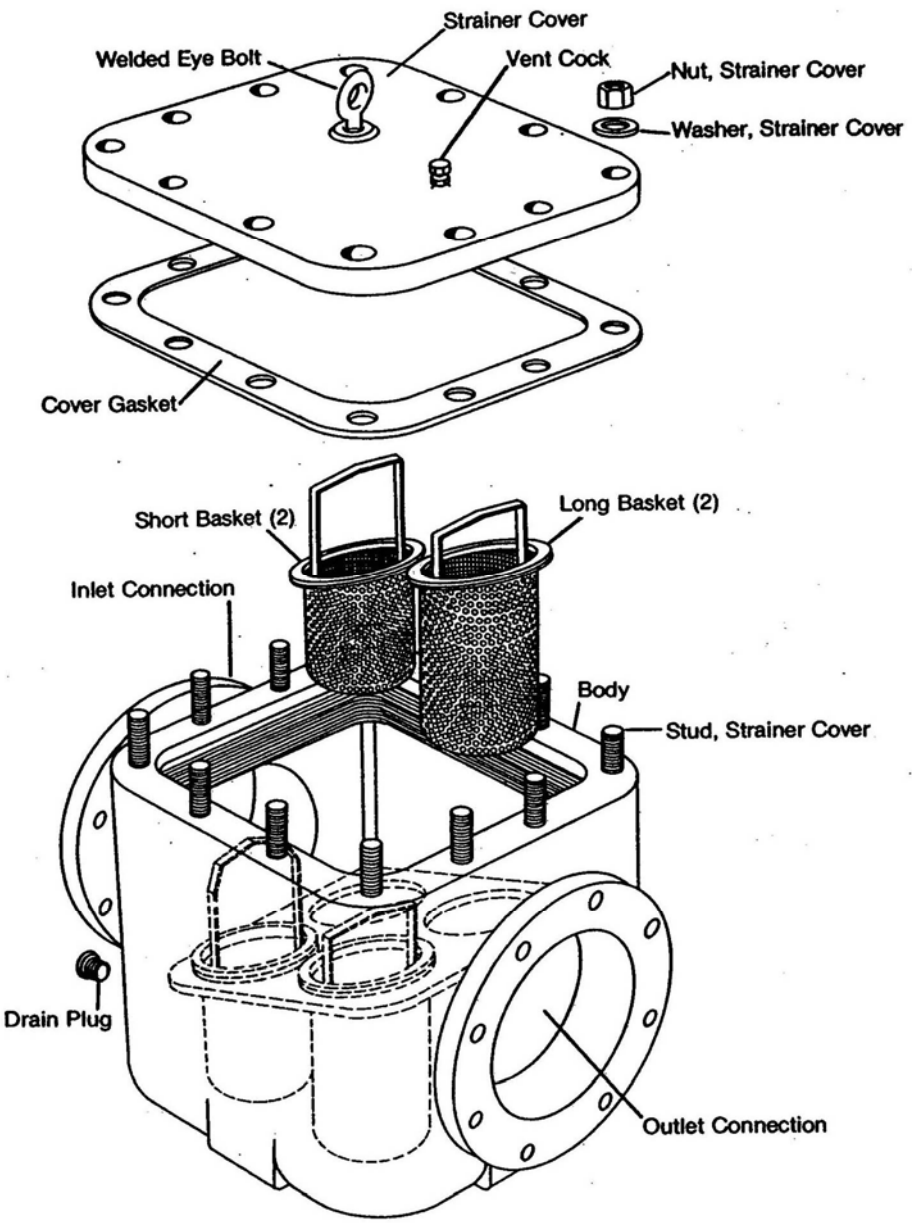

Eaton

REVISIONS				
REV	DESCRIPTION	BY	ECO	DATE
D	UPDATED TITLE BLOCK	R. DHONDE	0106104	12/25/2014

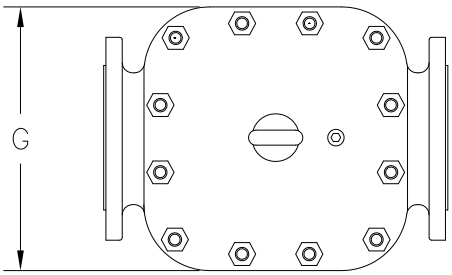

NO.	PART NAME	MATERIAL
1	BODY	CARBON STEEL
2	COVER	CARBON STEEL
3	COVER GASKET	NON-ASBESTOS
4	BASKET, SHORT	
5	BASKET, LONG	
	PERF.	
	MESH	
6	VENT COCK	BRONZE
7	DRAIN PLUG	CARBON STEEL
8	STUD	ALLOY STEEL
9	NUT	ALLOY STEEL

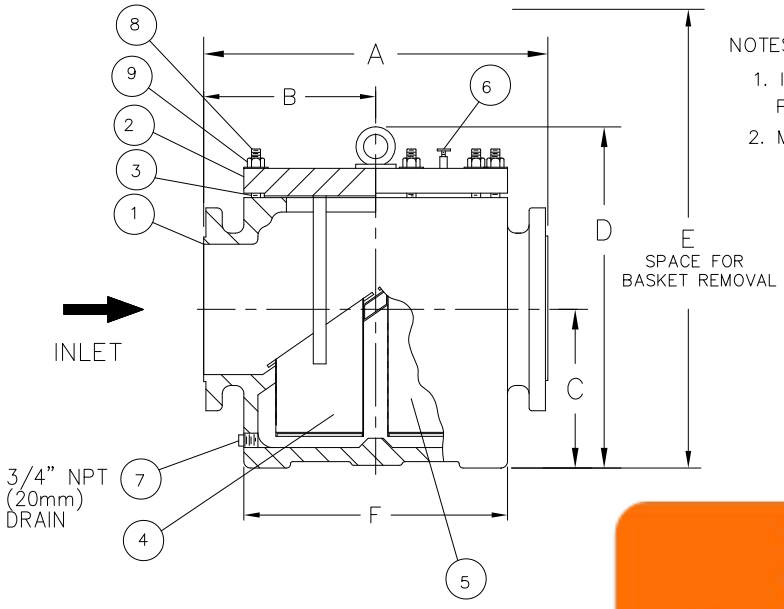

NOTES:

1. INLET/OUTLET FLANGE CONNECTIONS PER ASME B16.5.
2. MAX. WORKING PRESSURE: 150 PSI @ 100° F (10.3 BAR @ 37.8° C)

PIPE SIZE (NOM.)	DIMENSIONS A IN. MM	B IN. MM	C IN. MM	D IN. MM	E IN. MM	F IN. MM	G IN. MM	WEIGHT (DRY) LBS. KGS.	PART NO.
8 (200mm)	23.25 / 591	11.63 / 295	9.13 / 232	20.13 / 511	38 / 965	18.00 / 457	18.50 / 470	547 / 249	5100800180
10 (250mm)	26.13 / 664	13.06 / 332	11.38 / 289	23.75 / 603	44 / 1118	20.25 / 514	21.00 / 533	730 / 332	5101000180
12 (300mm)	29.00 / 737	14.50 / 368	14.63 / 372	28.38 / 721	52 / 1321	22.25 / 565	22.75 / 578	1080 / 491	5101200180
14 (350mm)	30.50 / 775	15.25 / 387	16.75 / 425	31.25 / 794	60 / 1524	24.63 / 626	25.13 / 638	1360 / 618	5101400180
16 (400mm)	33.50 / 851	16.75 / 425	19.13 / 486	35.50 / 902	66 / 1676	27.13 / 689	27.75 / 705	1750 / 795	5101600180
20 (500mm)	44.75 / 1137	22.00 / 559	28.50 / 724	46.25 / 1175	88 / 2235	32.75 / 832	34.75 / 883	3330 / 1514	5102000180
24 (600mm)	44.38 / 1127	22.19 / 564	31.50 / 800	52.25 / 1327	98 / 2489	36.63 / 930	38.50 / 978	4550 / 2068	5102400180

CUSTOMER INFO	
NAME	
P.O. NO.	
TAG NO.	
S.O. NO.	
PART NO.	SEE TABLE

DRAWN BY: FM
SCALE: AS DRAWN
RESTRICTION: RESTRICTED
SHEET: 1 OF 1
PROJECTION: THIRD ANGLE

EATON
HYDRAULICS GROUP
FILTRATION DIVISION
GALESBURG, MICHIGAN, USA • TINTON FALLS, NEW JERSEY, USA

TITLE: MODEL 510 SIMPLEX STRAINER, 150# RAISED FACE FLANGE, SIZES 8" THRU 24" CARBON STEEL

DATE	SIZE	DWG FILENAME	REV
01/25/95	A	SD510042	D